SELF POWERED PIEZOELECTRIC ENERGY HARVESTER

CB.EN.U4ECE23219	**HARISH VENKAT V S**
CB.EN.U4ECE23227	**MAMIDI RAHUL**
CB.EN.U4ECE23228	**MARNEEDI SUPRITHI**

in partial fulfillment of the requirements for the course

23ECE385 – Open Laboratory -II

Department of Electronics and Communication Engineering,
Amrita School of Engineering,
Amrita Vishwa Vidyapeetham, Coimbatore – 641112

March 2026

Table of Contents

List of Figure **i**

1. Motivation **1**

2. Problem Statement` **1**

3. Design Procedure **2**

3.1 Piezoelectric Energy Harvester 2

3.2 Input Impedance Design 2

3.3 Π-Type Passive Filter Design 2

3.4 Peak Detector 3

3.5 Comparator Design 3

3.6 P-Sshi Switching Circuit 4

3.7 Rectification And Energy Storage 4

4. Circuit Diagram/Board Layout **4**

5. Simulation Results **6**

6. Implementation / Prototyping results **7**

7. Discussion & Conclusion **9**

8. References **10**

List of Figures

Figure No.	Figure Caption	Page Number
Fig 3.1	Block Diagram	2
Fig 4.1	Piezoelectric Energy Harvester Module	4
Fig 4.2	π-Type Passive Filter Module	5
Fig 4.3	Peak Detector and Comparator Module	5
Fig 4.4	P-SSHI Switching Module	5
Fig 4.5	Gate Cross-Coupled Rectifier and Energy Storage Module	6
Fig 5.1	Input Signal	6
Fig 5.2	P-SSHI Switching and Peak Detector Output	6
Fig 5.3	Comparator Output	7
Fig 5.4	Output Voltage and Current	7
Fig 6.1	Working Model	7
Fig 6.2	Energy Stored and DSO Output	8
Fig 6.3	Output Before Tapping	8
Fig 6.4	Output After Tapping	9
Fig 6.5	PCB Layout	9

1. MOTIVATION:

Mechanical energy produced during human activities such as walking is usually wasted in the environment. Piezoelectric materials provide an efficient way to convert mechanical stress into electrical energy. The motivation of this project is to design a compact and self-powered energy harvesting system capable of converting low-frequency human footsteps into usable electrical power. Conventional rectifier-based harvesting circuits suffer from energy losses and impedance mismatch. Therefore, this project implements a synchronized switching interface circuit (P-SSHI) to improve energy extraction efficiency. The system operates without microcontrollers or external power sources, making it suitable for wearable electronics and low-power sensor applications.

2. PROBLEM STATEMENT:

- Design a compact and self-powered system capable of harvesting electrical energy from low-frequency mechanical vibrations generated by human footsteps using piezoelectric materials.
- Improve the efficiency of energy extraction from the piezoelectric element by implementing a synchronized switching technique such as the Parallel Synchronized Switch Harvesting on Inductor (P-SSHI) circuit.
- Condition the low-frequency piezoelectric output using appropriate filtering and signal conditioning circuits to ensure stable operation of the switching stage.
- Convert the generated AC voltage into usable DC power using an efficient rectification circuit with minimal energy loss.
- Store the rectified electrical energy in a storage capacitor and supply the stored energy to a load for practical low-power applications.
- Demonstrate the feasibility of a self-sustaining energy harvesting system suitable for low-power wearable electronics and sensor applications.

3. DESIGN PROCEDURE:

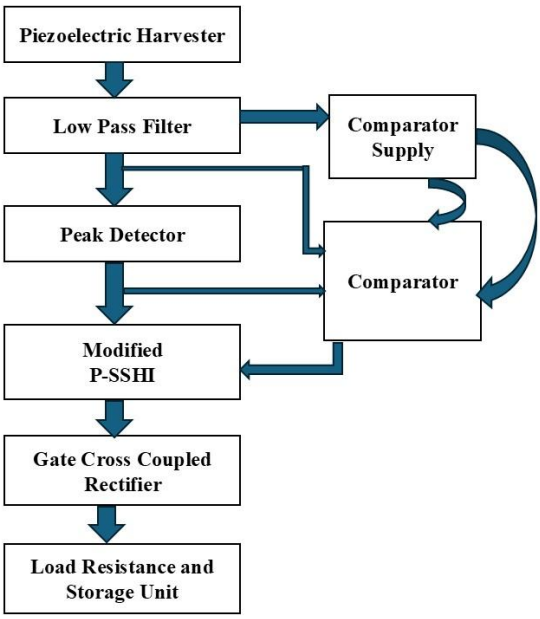

Fig 3.1- Block Diagram

3.1 PIEZOELECTRIC ENERGY HARVESTER

A piezoelectric disc made of lead zirconate titanate (PZT) converts mechanical stress from tapping or footsteps into an AC voltage signal. This AC output is rectified to DC using a full-wave bridge rectifier with four 1N5819 Schottky diodes. The rectified voltage is then stored in a 100 µF capacitor, which smooths the output and stores the harvested energy for the load.

3.2 INPUT IMPEDANCE DESIGN

To avoid loading the piezoelectric element and ensure maximum energy transfer, a high-value resistor is used at the input. The reactance of the internal capacitance is given by

$$X_c = \frac{1}{2\pi f C_p}.$$

At 1 Hz, the reactance is about 1.06 MΩ. Hence, a 1.5 MΩ resistor is chosen to maintain high input impedance and minimize energy loss.

3.3 Π-TYPE PASSIVE FILTER DESIGN

A third-order π-type low-pass filter is used to suppress high-frequency switching noise while allowing the low-frequency piezoelectric signal to pass. It consists of two capacitors and one inductor in a π configuration. The equivalent capacitance is $C_{eq} = C_2 + C_3 = 2$ nF. For a corner frequency of 10 kHz, the inductance is calculated using

$$L = \frac{1}{(2\pi f_c)^2 C_{eq}}$$

giving approximately 127 mH. Practically, inductors in the range of 10–200 mH can be used.

3.4 PEAK DETECTOR

The output voltage of the piezoelectric harvester is a sinusoidal signal given by $V_{in}(t) = V_p \sin(\omega t)$, where $\omega = 2\pi f$.

To detect the peak points of the waveform, a peak detector circuit is used. The derivative of the input signal is

$$\frac{dV_{in}}{dt} = V_p \omega \cos(\omega t)$$

The peak detector generates trigger pulses proportional to the magnitude of the slope of the input waveform. The maximum peak detector output is given by

$$V_{d,max} = R_{trig} C_{trig} (V_p \omega)$$

For proper operation, the comparator triggers when the peak detector output reaches the comparator input threshold. Using the relation

$$R_{trig} C_{trig} = \frac{V_p - V_D}{V_p \omega}$$

With $V_p = 3.6\,V$, diode drop $V_D = 0.4\,V$, and frequency $f = 1\,Hz$, the required RC time constant is approximately 0.1415 s.

By selecting $C_{trig} = 100\,nF$, the resistor value is calculated as $R_{trig} \approx 1.4\,M\Omega$for the peak detection circuit.

3.5 COMPARATOR DESIGN

An ultra-low-power comparator TLV3691 is used to detect the peak detection pulses. The comparator compares the detected peak voltage with a reference threshold and produces a digital output signal when the threshold is exceeded. The comparator has a supply voltage range of 0.9 V to 6.5 V and a very low quiescent current of approximately 75 nA, making it suitable for low-power energy harvesting systems.

3.6 P-SSHI SWITCHING CIRCUIT

To increase the energy extraction efficiency, a Parallel Synchronized Switch Harvesting on Inductor (P-SSHI) circuit is implemented. The comparator output controls MOSFET switches that connect an inductor across the piezoelectric capacitor at each voltage peak. This causes voltage inversion across the piezoelectric element, increasing the amount of energy transferred to the load.The switching stage uses

- IRLML6246(N-Channel MOSFET)
- AO3435(P-Channel MOSFET)

These MOSFETs have low threshold voltage and low on-resistance, enabling efficient switching at low voltage levels.

3.7 RECTIFICATION AND ENERGY STORAGE

The harvested AC signal is converted to DC using a Gate Cross-Coupled Rectifier (GCCR). This rectifier configuration reduces the voltage drop compared to conventional diode bridge rectifiers, improving energy conversion efficiency. The rectified output is stored in a storage capacitor and supplied to a load resistor for practical applications.

4. CIRCUIT DIAGRAM / BOARD LAYOUT / SCHEMATIC:

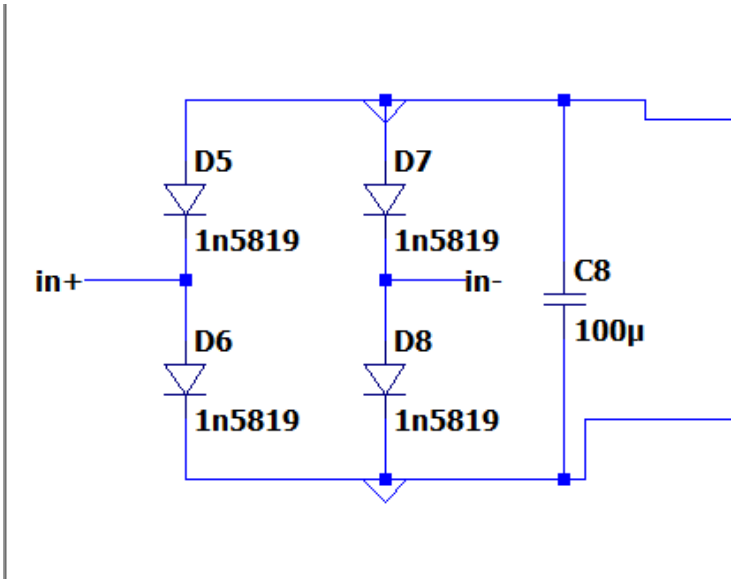

Fig 4.1- Piezoelectric Energy Harvester Module

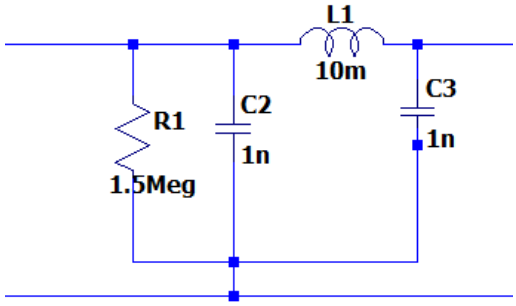

Fig 4.2- π-Type Passive Filter Module

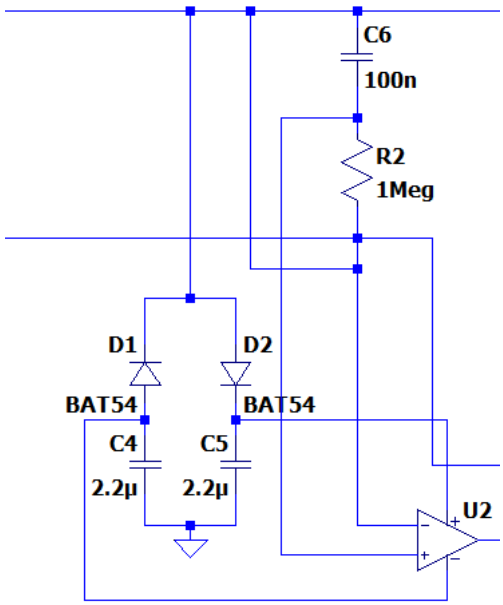

Fig 4.3- Peak Detector and Comparator Module

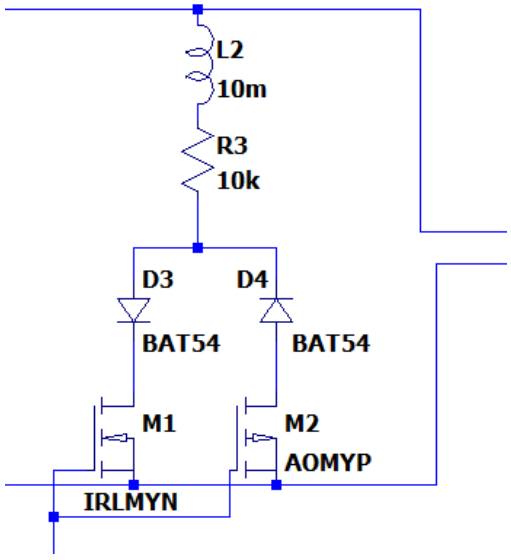

Fig 4.4- P-SSHI Switching Module

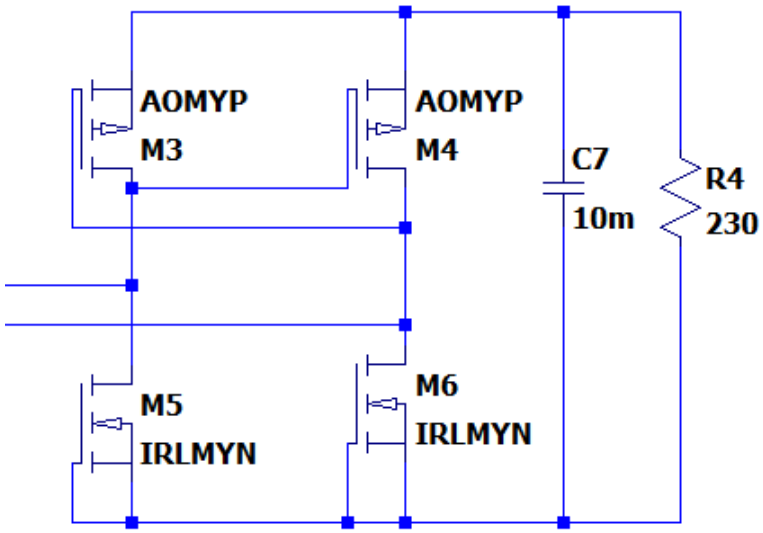

Fig 4.5- Gate Cross-Coupled Rectifier and Energy Storage Module

5. SIMULATION RESULTS / DISCUSSION:

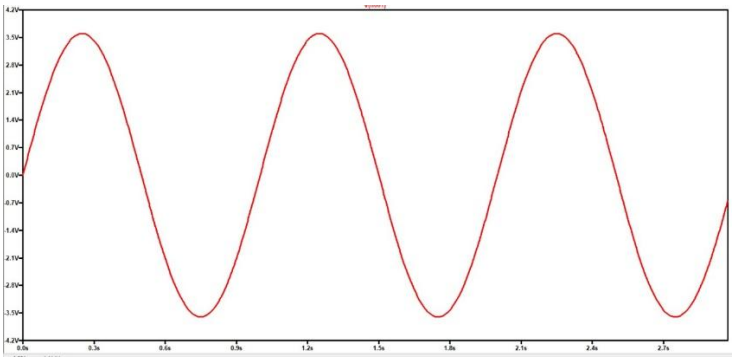

Fig 5.1-Input Signal

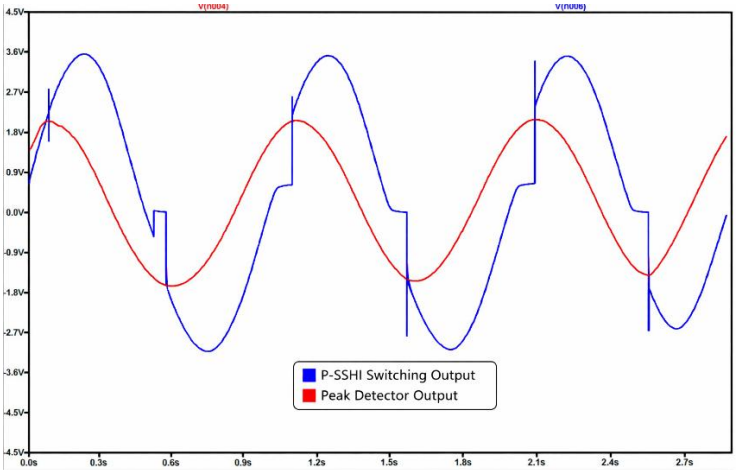

Fig 5.2-P-SSHI Switching and Peak Detector Output

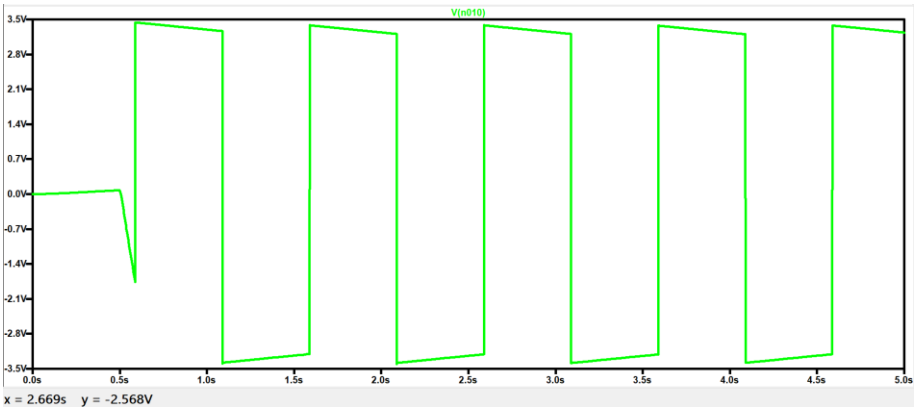

Fig 5.3-Comparator Output

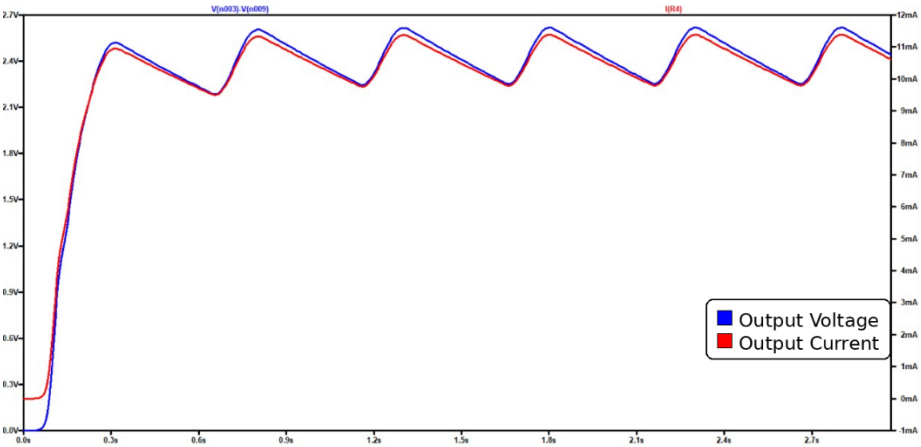

Fig 5.4-Output Voltage and Current

6. IMPLEMENTATION / PROTOTYTPING RESULTS:

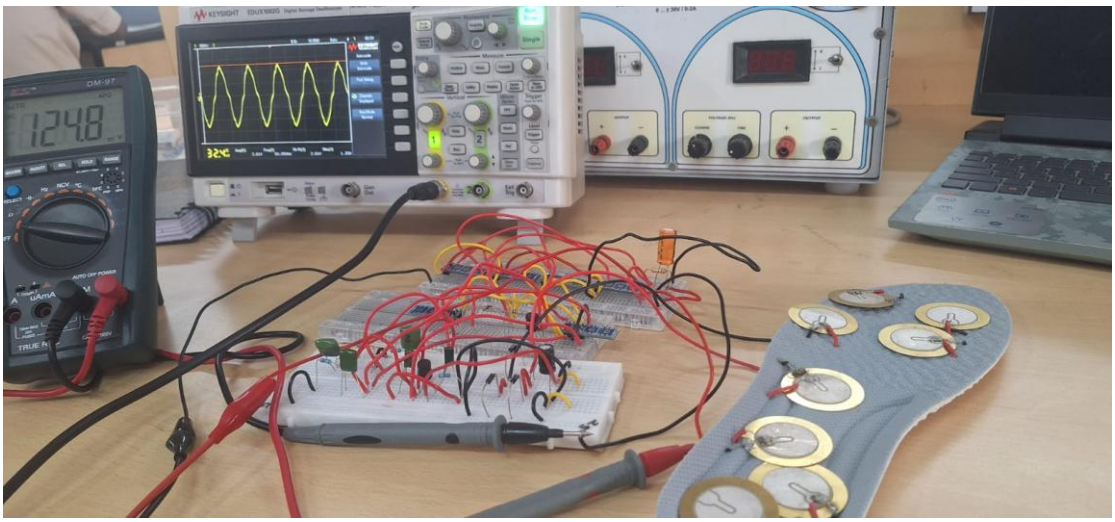

Fig6.1- Working Model

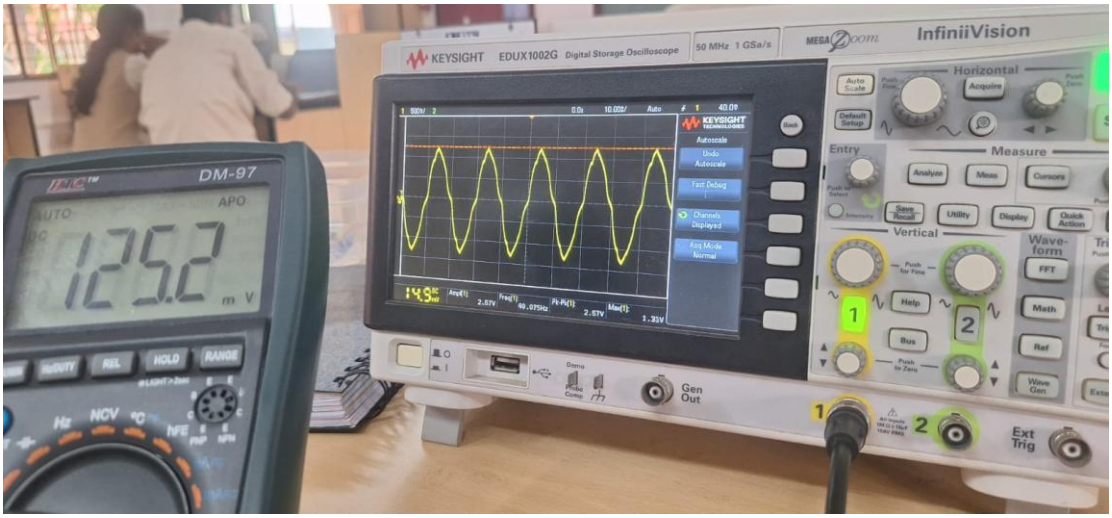

Fig 6.2-Energy Stored and DSO Output

The experimental setup of the piezoelectric energy harvesting circuit is shown along with the DSO measurement. When mechanical stress is applied to the piezoelectric discs, an AC voltage waveform is observed on the DSO, confirming successful conversion of mechanical vibrations into electrical energy.

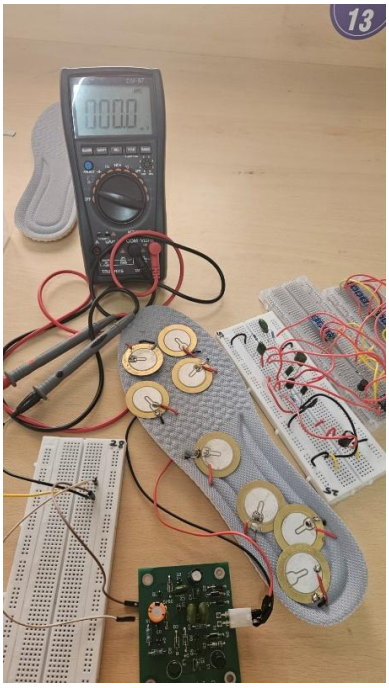

Fig 6.3- Output Before Tapping

The circuit setup is shown before applying mechanical stress to the piezoelectric disccs.since no tapping is applied,the multimeter indicates zero voltage,confirming that electrical output is generated only when mechanical vibrations are applied to the piezoelectric discs.

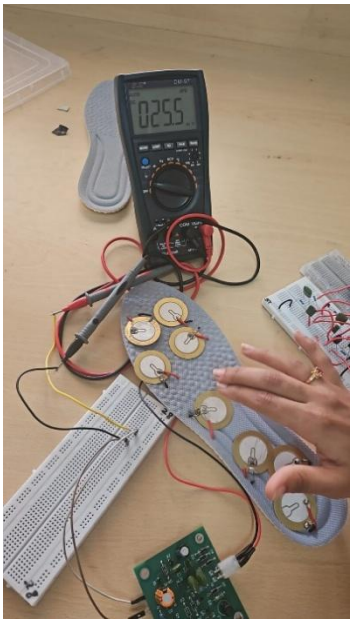

Fig 6.4-Output After Tapping

When mechanical stress is applied to the piezoelectric discs through tapping, electrical energy is generated due to the piezoelectric effect. The multimeter shows a measurable voltage output, demonstrating successful conversion of mechanical vibrations into electrical energy.

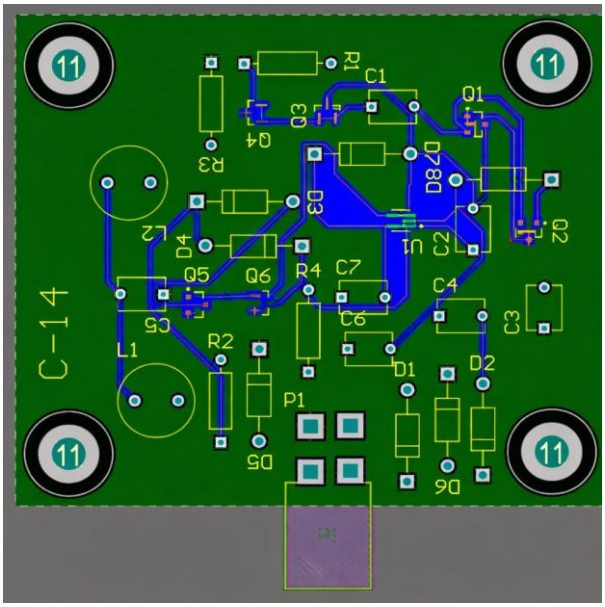

Fig 6.5 – PCB Layout

7. DISCUSSION & CONCLUSIONS:

- Piezoelectric discs generated an AC voltage when mechanical stress (tapping or pressing) was applied, producing a sinusoidal waveform that served as the input to the energy harvesting circuit.

- The DSO displayed the waveform, confirming the conversion of mechanical vibrations into electrical signals.
- Each tap produced a voltage peak on the DSO, with higher tapping force generating higher output voltage.
- The output voltage increased with the intensity of tapping, showing that the electrical output is proportional to the applied mechanical stress.
- The circuit rectified and processed the AC signal to produce usable electrical output.
- The measured output ranged from approximately **60 mV to 200 mV** depending on tapping force. Repeated tapping enabled continuous energy generation and accumulation.

8. REFERENCES:

[1] M. Ben Ammar, S. Sahnoun, A. Fakhfakh, C. Viehweger, and O. Kanoun, "Self-powered synchronized switching interface circuit for piezoelectric footstep energy harvesting," *Sensors*, vol. 23, no. 4, Art. no. 1830, Feb. 2023. [Online]. Available: https://doi.org/10.3390/s23041830

[2] H. S. Kim, J.-H. Kim, and J. Kim,"A review of piezoelectric energy harvesting based on vibration," *International Journal of Precision Engineering and Manufacturing*, vol. 12, no. 6, pp. 1129–1141, Dec. 2011. [Online]. Available: https://doi.org/10.1007/s12541-011-0151-3

[3] F. Qian, T.-B. Xu, and L. Zuo, "Piezoelectric energy harvesting from human walking using a two-stage amplification mechanism," *Energy*, vol. 189, Art. no. 116140, Sep. 2019. [Online]. Available: https://doi.org/10.1016/j.energy.2019.116140

[4] S. Chamanian, B. Çiftçi, A. Muhtaroğlu, and H. Külah, "A self-powered and area efficient SSHI rectifier for piezoelectric harvesters," *IEEE Access*, vol. 9, pp. 117703–117715, Aug. 2021. [Online]. Available: https://doi.org/10.1109/ACCESS.2021.3107365

[5] K. A. Chandra, S. Narayan, K. A. Mamun, A. A. Chand, D. Prasad, and M. R. Ahmed, "A review of footstep energy harvesting systems," *IEEE Access*, vol. 13, pp. 87149–87166, May 2025. [Online]. Available: https://doi.org/10.1109/ACCESS.2025.3570963